TECHNICAL DRAWING | Rack Shelf 4U 370 | AUDIBAX | 10316223

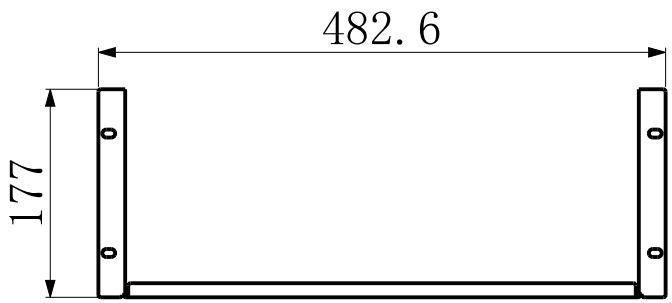

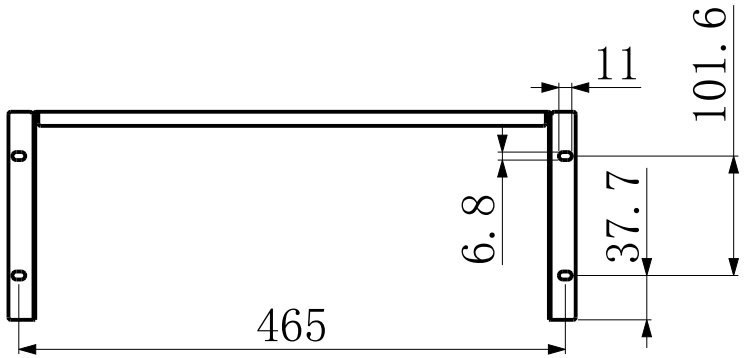

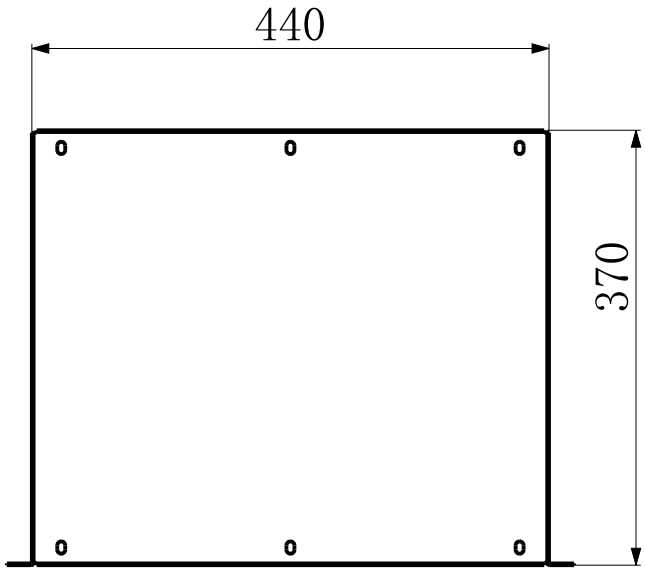

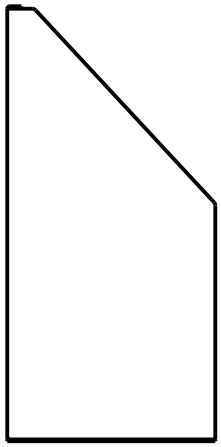

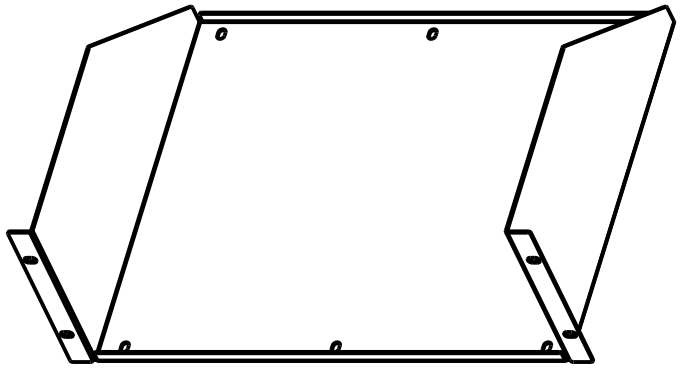

The color and images contained in this brochure are not necessarily representative of actual colors. Specifications are to change without notice.