TECHNICAL DRAWING | Rack Shelf 4U 500 | AUDIBAX | 10316227

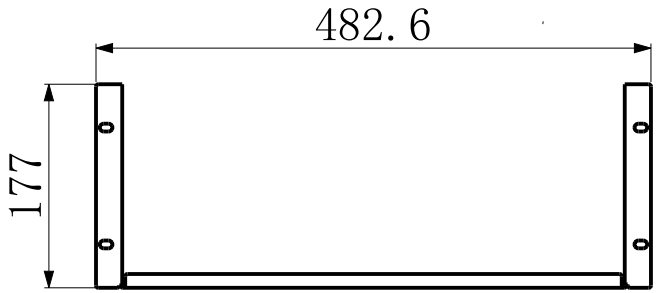

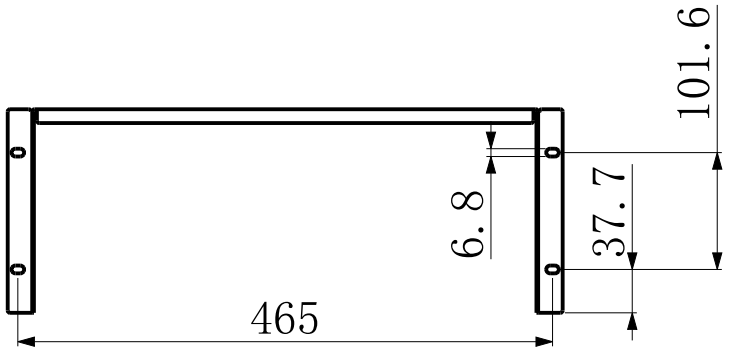

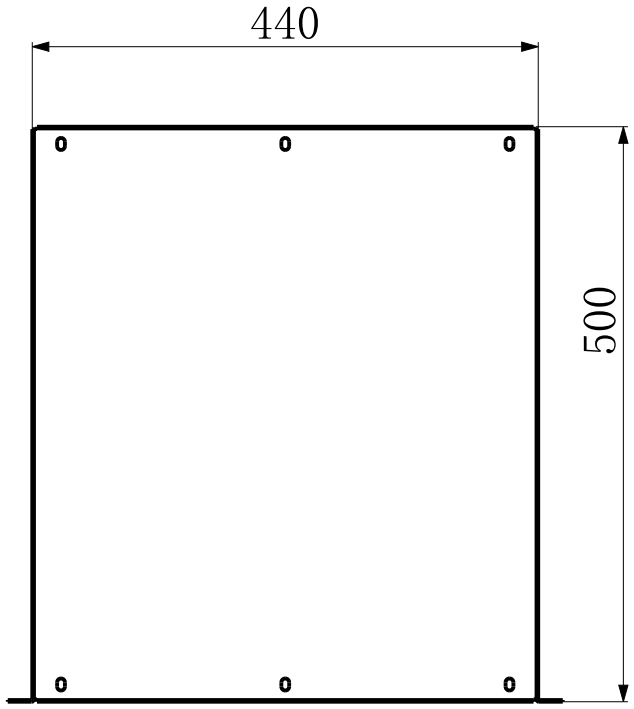

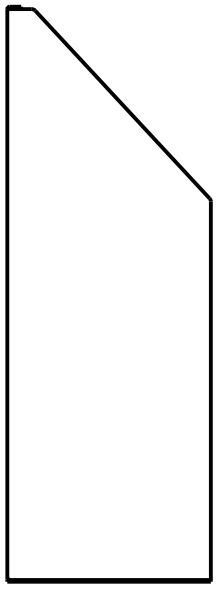

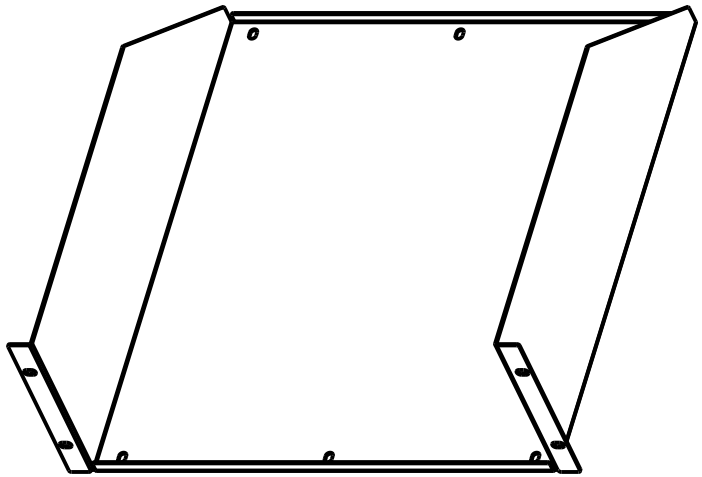

Audibax - www.audibax.com
Audibax is a brand of MH GROUP | C/ Río Almanzora, 1C, 28906 Getafe, Madrid, Spain - Tfno: +34 917 585 534 - sales@audibax.com
The color and images contained in this brochure are not necessarily representative of actual colors. Specifications are to change without notice.