Contest®

5 RGBW LEDS COMPACT PROJECTOR WITH INFRARED REMOTE CONTROL

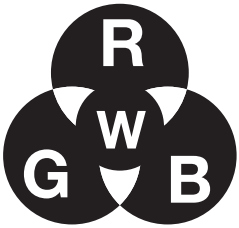

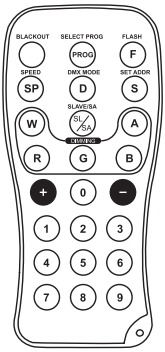

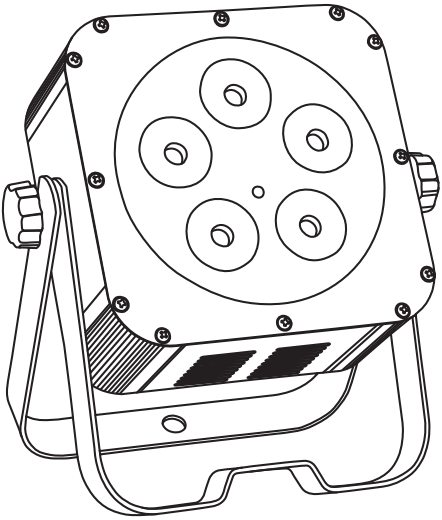

irLEDFLAT

5x5QCb **25°**

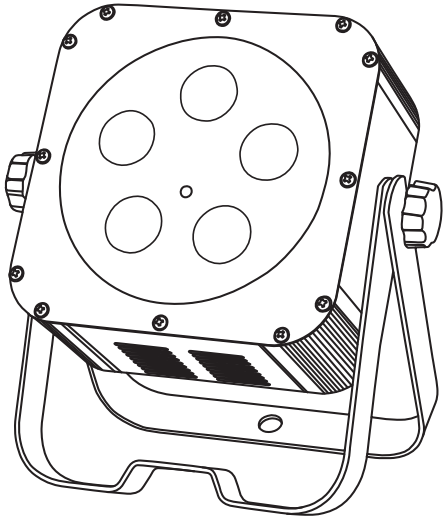

irLEDFLAT

5x5QCb

USER GUIDE

9917 / 9973 - Version 2.0 / 11-2012

1 - Safety information

Important safety information

This unit is intended for indoor use only. Do not use it in a wet, or extremely cold/hot locations. Failure to follow these safety instructions could result in fire, electric shock, injury, or damage to this product or other property.

Any maintenance procedure must be performed by a CONTEST authorised technical service. Basic cleaning operations must thoroughly follow our safety instructions.

This product contains non-isolated electrical components. Do not undertake any maintenance operation when it is switched on as it may result in electric shock.

Symbols used

This symbol signals an important safety precaution.

The WARNING symbol signals a risk to the user's physical integrity. The product may also be damaged.

The CAUTION symbol signals a risk of product deterioration.

WARNING : This unit contains no user-serviceable parts. Do not open the housing or attempt any maintenance by yourself. In the unlikely even your unit may require service, please contact your nearest dealer.

In order to avoid any electrical malfunction, please do not use any multi-socket, power cord extension or connecting system without making sure they are perfectly isolated and present no defect.

Warning

This product is equipped with Class 2 LEDs.
Please avoid looking directly at the beam as it may cause severe eye injuries.

Recycling your device

- As HITMUSIC is really involved in the environmental cause, we only commercialise clean, ROHS compliant products.
- When this product reaches its end of life, take it to a collection point designated by local authorities. The separate collection and recycling of your product at the time of disposal will help conserve natural resources and ensure that it is recycled in a manner that protects human health and the environment.

Instructions and recommendations

1 - Please read carefully :
We strongly recommend to read carefully and understand the safety instructions before attempting to operate this unit.

2 - Please keep this manual :
We strongly recommend to keep this manual with the unit for future reference.

3 - Operate carefully this product :
We strongly recommend to take into consideration every safety instruction.

4 - Follow the instructions:
Please carefully follow each safety instruction to avoid any physical harm or property damage.

5 - Avoid water and wet locations :
Do not use this product in rain, or near washbasins or other wet locations.

6 - Installation :
We strongly encourage you to only use a fixation system or support recommended by the manufacturer or supplied with this product. Carefully follow the installation instructions and use the adequate tools.
Always ensure this unit is firmly fixed to avoid vibration and slipping while operating as it may result in physical injury.

7 - Ceiling or wall installation :
Please contact your local dealer before attempting any ceiling or wall installation.

8 - Ventilation :
The cooling vents ensure a safe use of this product, and avoid any overheating risk. Do not obstruct or cover these vents as it may result in overheating and potential physical injury or product damage. This product should never been operated in a closed non-ventilated area such as a flight case or a rack, unless cooling vents are provided for the purpose .

9 - Heat exposure :
Sustained contact or proximity with warm surfaces may cause overheating and product damages. Please keep this product away from any heat source such as a heaters, amplifiers, hot plates, etc...

10 - Electric power supply :
This product can only be operated according to a very specific voltage. These information are specified on the label located at the rear of the product.

11 - Power cords protection:
Power-supply cords should be routed so that they are not likely to be walked on or pinched by items placed upon or against them, paying particular attention to cords at lugs, convenience receptacles and the point where they exit from the fixture.

12 - Cleaning precautions :
Unplug the product before attempting any cleaning operation. This product should be cleaned only with accessories recommended by the manufacturer. Use a damp cloth to clean the surface. Do not wash this product.

13 - Long periods of non use :
Disconnect the unit's main power during long periods of non use.

14 - Liquids or objects penetration :
Do not let any object penetrate this product as it may result in electric shock or fire. Never spill any liquid on this product as it may infiltrate the electronic components and result in electric shock or fire.

15 - This product should be serviced when :
Please contact the qualified service personnel if :
- The power cord or the plug has been damaged.
- Objects have fallen or liquid has been spilled into the appliance.
- The appliance has been exposed to rain or water.
- The product does not appear to operate normally.
- The product has been damaged.

16 - Inspection/maintenance :
Please do not attempt any inspection or maintenance by yourself. Refer all servicing to qualified personnel.

17 - Operating environment :
Ambient temperature and humidity: +5 - +35°C, relative humidity must be less than 85% (when cooling vents are not obstructed).
Do not operate this product in a non-ventilated, very humid or warm place.

2 - Introduction

These projectors is equipped with 5 super-powerful RGBW LEDs with high-performance individual lenses.
In addition to primary colours (such as blue, red, green...) the white shades and Amber create warm and brightful colours.
The irLEDFLAT QC projectors are supplied with an infrared remote control to access colour control, built-in programs, DMX settings and a lot more.

3 - Technical specifications

• **Their strengths :**
- 4-in-1 LEDs
- Brightness
- Natural colours and light
- Manual, music-sensitive and DMX modes, customisable user programs
- Remote control supplied
- Infrared sensor (front) + infrared repeater system with 1m cable
- Power input/output

• **Functions:**
- Built-in command panel with digital drop-down display for:
- DMX addressing
- Choosing the number of channels: 2-7
- Choosing the built-in programs
- Choosing the preset colours
- Master/slave mode
- Music-sensitive mode and choosing the mic sensitivity

- New infrared remote control giving you access to every remote function

• **Package contents:**
The package must contain the following products:
- A projector
- A user guide
- A double mounting bracket
- An infrared remote control
- A 2-pole + earth power cord
- An infrared repeater system with 1m cable

irLEDFLAT-5x5QCb

• **Optical**:
- 5x5W 4-in-1 LEDs - 50.000 hours
- Beamwidth : 40°
• **Connectors**:
- DMX IN and OUT via 3-pin XLR,
- POWER IN/OUT via an IEC socket
• **Power supply**: 110/240 V 50/60 Hz
• **Power consumption**: 30 W
• **Finish**: Black
• **Dimensions**: 240 x 110 x 265 mm
• **Weight**: 2.8 kg

irLEDFLAT-5x5QCb 25°

• **Optical**:
- 5x5W 4-in-1 LEDs - 50.000 hours
- Beamwidth : 25°
• **Connectors**:
- DMX IN and OUT via 3-pin XLR,
- POWER IN/OUT via an IEC socket
• **Power supply**: 110/240 V 50/60 Hz
• **Power consumption**: 30 W
• **Finish**: Black
• **Dimensions**: 240 x 110 x 265 mm
• **Weight**: 2.8 kg

4 - Rear pannel description

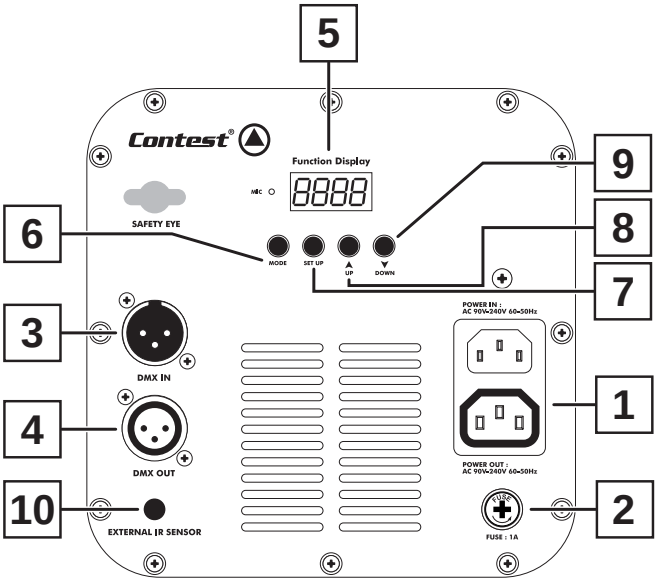

1 **Power input/output socket**

Allows you to connect the projector to an electrical outlet and to link several projectors together via a Male/Female IEC cord. Please make sure the voltage is in adequation with the product indications.

Caution : Do NOT go over 700W on the same power source.

2 **Fuse**

If need to replace the fuse, please make sure the new fuse has exactly the same characteristics as the original one.

3 **DMX input**

3-pin female XLR plug hardwired as follows :

- Mass: 1
- Negative signal: 2
- Positive signal: 3

4 **DMX output**

3-pin male XLR plug hardwired as follows :

- Mass: 1
- Negative signal: 2
- Positive signal: 3

5 **Display**

This intuitive display allows you to configure your projector. Please refer to the next paragraphs for more details about the projector configuration.

6 **MODE button**

Allows you to access menus and select a function.

7 **SETUP button**

Allows you to configure the parameters of the functions chosen with the MODE button.

8 **UP button**

Press UP to increase the adjustable values or browse the sub-menus.

9 **DOWN button**

Press DOWN to decrease the adjustable values or browse the sub-menus.

10 **Infrared receiver input**

This Jack 3.5 plug allows you to connect the infrared repeater system.

This receiver can be used when the front sensor of the projector is too far to receive the remote control commands.

5 - Menus and functions

Access the internal menu by pressing **MODE**.
To access a submenu, press **MODE** again.
Press **SETUP** to configure the selected function.
Simultaneously press **MODE** and **UP** if you want the display to stay lit all the time.
If you want the display to lit off when the menu remains inactive for more than 20 seconds, press simultaneously **MODE** and **DOWN**.

The irLEDFLAT projectors feature several DMX modes to be fully compatible with different remote controls and projectors. Use the MODE button the choose a DMX mode. They are listed in the table below.
In brief, 3 «groups» are available:

- **Group 1** : Compatible with RGB projectors: LEDs will not use white.
- **Group 2** : Compatible with RGB projectors and white: The white colour can be used via the last channel.
- **Group 3** : Compatible with RGBW projectors : White is after RGB colours.

Mode		SETUP	UP and DOWN	Action
DMX MODES	DMX **without white** **Group 1**		1CH2	**2** channels : macros and dimmer
			1CH3	**3** channels : R, G and B
			1CH4	**4** channels : R, G, B and Dimmer/Strobe
			1CH5	**5** channels : R, G, B, Dimmer and Strobe
			1CH6	**6** channels : R, G, B, Dimmer, Strobe/Speed and Macros
	DMX with **white after** functions **Group 2**		2CH2	**2** channels : Macros and Dimmer
			2CH4	**4** channels : R, G, B and W
			2CH5	**5** channels : R, G, B, Dimmer/Strobe and W
			2CH6	**6** channels : R, G, B, Dimmer, Strobe and W
			2CH7	**7** channels : R, G, B, Dimmer, Strobe/Vitesse/Sensibilité, Macros et W
	DMX with **white before** functions **Group 3**		3CH5	**5** channels : R, G, B, W and Dimmer/Strobe
			3CH6	**6** channels : R, G, B, W, Dimmer and Strobe
			3CH7	**7** channels : R, G, B, W, Dimmer, Strobe/Vitesse/Sensitivity and Macros
		Adresse	d001 d512	DMX address settings

Fixed colours and sequences	**RGB Mode** Colours	1C.01 1C.15	RGB mode: 1-10 colour selection, colour programs, and 4 colour programs with crossfade
	RGB Mode Strobe	FS.00 FS.99	RGB mode: Strobe speed : FS.00 = No strobe ; FS.99 = Full speed
	RGB Mode Speed	1P.01 1P.99	RGB mode: step programs speed and crossfade speeds
	RGB Mode Colours	2C.01 2C.31	RGB mode: 1-24 colour selection, colour programs, 4 colour step programs and 5 colour programs with crossfade
	RGBW Mode Strobe	FS.00 FS.99	RGBW mode: Strobe speed : FS.00 = No strobe ; FS.99 = Full speed
	RGBW Mode Speed	2P.01 2P.99	RGBW mode: step programs speed and crossfade speeds
Dimmer RVBW		r.000 r.255	Red: 0 - 100%
		G.000 G.255	Green: 0 - 100%
		b.000 b.255	Blue: 0 - 100%
		h.000 h.255	White: 0 - 100%
	Strobe	FS.00 FS.99	Strobe speed : FS.00 = No strobe ; FS.99 = Full speed
Auto mode		AUTO	Activates the automatic mode
	Strobe	FS.00 FS.99	Strobe speed : FS.00 = No strobe ; FS.99 = Full speed
Music-sensitive mode	Sensitivity	SU.00 SU.31	SU.00 = min sensitivity ; SU.31 = max sensitivity
Slave mode		SLAu	Activates the slave mode

Note :

- Choosing a DMX mode does not require specific settings as only the DMX address can be configured in this mode.
- In automatic mode, you can only configure the strobe speed.

6 - The various DMX modes

6.1 - 2-channel mode= Pure RGB (no white) = 1CH2

CHANNEL 1		CHANNEL 2	
DMX values	**Effects**	**DMX values**	**Effects**
000 - 015	Off	**000 - 255**	Dimmer: 0 - 100%
016 - 030	Red		
031 - 045	Orange		
046 - 060	Yellow		
061 - 075	Green		
076 - 090	Cyan		
091 - 105	Blue		
106 - 120	Pink		
121 - 135	Magenta		
136 - 150	Cool white (6000°K)		
151 - 165	Warm white (3200°K)		
166 - 180	Macro 1 : All colours sequence	**000 - 255**	Speed: 0 - 100%
181 - 195	Macro 2 : Green to Blue crossfade		
196 - 210	Macro 3 : Orange to Red crossfade		
211 - 225	Macro 4 : Magenta to Cyan crossfade		
226 - 240	Macro 5 : Warm White to Cool White crossfade		
241 - 255	Music-sensitive colour macro	**000 - 255**	Mic sensitivity

6.2 - 3-channel mode= Pure RGB (no white) = 1CH3

	DMX values	Effects
CHANNEL 1	**000 - 255**	Red from 0 to 100%
CHANNEL 2	**000 - 255**	Green from 0 to 100%
CHANNEL 3	**000 - 255**	Blue from 0 to 100%

6.3 - 4-channel mode= Pure RGB (no white) = 1CH4

	DMX values	Effects
CHANNEL 1	**000 - 255**	Red from 0 to 100%
CHANNEL 2	**000 - 255**	Green from 0 to 100%
CHANNEL 3	**000 - 255**	Blue from 0 to 100%
CHANNEL 4	**000 - 189**	Main dimmer from 0 to 100%
	190 - 250	Slow to fast strobe
	251 - 255	Full power

6.4 - 5-channel mode= Pure RGB (no white) = 1CH5

	DMX values	Effects
CHANNEL 1	**000 - 255**	Red from 0 to 100%
CHANNEL 2	**000 - 255**	Green from 0 to 100%
CHANNEL 3	**000 - 255**	Blue from 0 to 100%
CHANNEL 4	**000 - 255**	Main dimmer from 0 to 100%
CHANNEL 5	**000**	No strobe
	001 - 255	Slow to fast strobe

6.5 - 6-channel mode= Pure RGB (no white)= 1CH6

CH 6		CH 5	CH 4	CH 3	CH 2	CH 1
DMX values	**Function**					
000 - 015	Black-out	No function **(000 - 015)** **Strobe (016 - 255)** From slow to fast	**Main dimmer (000 - 255)** From 0-100%	Blue **(000 - 255)** From 0 to 100%	Green **(000 - 255)** From 0 to 100%	Red **(000 - 255)** From 0 to 100%
016 - 030	Red			No function	No function	No function
031 - 045	Orange					
046 - 050	Yellow					
061 - 075	Green					
076 - 090	Cyan					
091 - 105	Blue					
106 - 120	Pink					
121 - 135	Magenta					
136 - 150	Cool white (6000°K)					
151 - 165	Warm white (3000°K)					
166 - 180	Macro 1	**Speed (000 - 255)** From slow to fast				
181 - 195	Macro 2					
196- 210	Macro 3					
211 - 225	Macro 4					
226 - 240	Macro 5					
241 - 255	Music-sensitive sequence	Mic sensitivity **(000 - 255)**				

6.6 - 2-channel mode= RGB with white (Pure RGB compatible) = 2CH2

CHANNEL 1		CHANNEL 2	
DMX values	**Effects**	**DMX values**	**Effects**
000 - 007	Off	**000 - 255**	Dimmer: 0 to 100%
008 - 015	Red		
016 - 023	Orange		
024 - 030	Yellow		
031 - 038	Green		
039 - 045	Cyan		
046 - 053	Blue		
054 - 060	Pink		
061 - 068	Magenta		
069 - 075	Cool White (6000°K)		
076 - 083	Warm white (3200°K)		
084 - 090	Full power		
091 - 098	Light Pink		
099 - 105	Light Apricot		
106 - 113	Light Ocre		
114 - 120	Yellow-Green		
121 - 128	Green Pearl		
129 - 135	Grey Pearl		
136 - 143	Pearl		
144 - 150	Blue Pearl		
151 - 158	Green Veronese		
159 - 165	Blue Lagon		
166 - 173	Sky Blue		
174 - 180	Light Blue		
181 - 188	Cerulean Blue		
189 - 195	Macro 1 : All RGB colours sequence	**000 - 255**	Speed: 0 to 100%
196 - 203	Macro 2 : All RGBW colours sequence		
204 - 210	Macro 3 : Crossfade 1		
211 - 218	Macro 4 : Crossfade 2		
219 - 225	Macro 5 : Crossfade 3		
226 - 233	Macro 6 : Crossfade 4		
234 - 240	Macro 6 : Crossfade 5		
241 - 248	Music-sensitive colour macro 1 : RGB	**000 - 255**	Mic sensitivity
249 - 255	Music-sensitive colour macro 2 : RGBW		

6.7 - 4-channel mode = RGBW = 2CH4

	DMX values	Effects
CHANNEL1	**000 - 255**	Red from 0 to 100%
CHANNEL 2	**000 - 255**	Green from 0 to 100%
CHANNEL 3	**000 - 255**	Blue from 0 to 100%
CHANNEL 4	**000 - 255**	White from 0 to 100%

6.8 - 5-channel mode= RGBW with white (Pure RGB compatible) = 2CH5

	DMX values	Effects
CHANNEL1	**000 - 255**	Red from 0 to 100%
CHANNEL 2	**000 - 255**	Green from 0 to 100%
CHANNEL 3	**000 - 255**	Blue from 0 to 100%
CHANNEL 4	**000 - 189**	Dimmer: 0 to 100%
	190 - 250	Slow to fast strobe
	251 - 255	Full power
CHANNEL 5	**000 - 255**	White from 0 to 100%

6.9 - 6-channel mode = RGBW (Pure RGB compatible) = 2CH6

	DMX values	Effects
CHANNEL1	**000 - 255**	Red from 0 to 100%
CHANNEL 2	**000 - 255**	Green from 0 to 100%
CHANNEL 3	**000 - 255**	Blue from 0 to 100%
CHANNEL 4	**000 - 255**	Dimmer: 0 to100%
CHANNEL 5	**000**	No strobe
	001 - 255	Slow to fast strobe
CHANNEL 6	**000 - 255**	White from 0 to 100%

6.10 - 7-channel mode = RGBW (Pure RGB compatible) = 2CH7

CH 7	CH 6		CH 5	CH 4	CH 3	CH 2	CH 1
	DMX values	**Function**					
White **(000 - 255)** From 0-100%	**000 - 007**	Off	No function **(000 - 015)** **Strobe (016 - 255)** From slow to fast	Main dimmer **(000 - 255)** From 0-100%	Blue **(000 - 255)** From 0-100%	Green **(000 - 255)** From 0-100%	Red **(000 - 255)** From 0-100%
No function	**008 - 015**	Red			No function	No function	No function
	016 - 023	Orange					
	024 - 030	Yellow					
	031 - 038	Green					
	039 - 045	Cyan					
	046 - 053	Blue					
	054 - 060	Pink					
	061 - 068	Magenta					
	069 - 075	Cool White (6000°K)					
	076 - 083	Warm white (3200°K)					
	084 - 090	Full power					
	091 - 098	Light Pink					
	099 - 105	Light Apricot					
	106 - 113	Light Ocre					
	114 - 120	Yellow-Green					
	121 - 128	Green Pearl					
	129 - 135	Grey Pearl					
	136 - 143	Pearl					
	144 - 150	Blue Pearl					
	151 - 158	Green Veronese					
	159 - 165	Blue Lagon					
	166 - 173	Sky Blue					
	174 - 180	Light Blue					
	181 - 188	Cerulean Blue					
	189 - 195	Macro 1 : All RGB colours sequence	**Speed(000 - 255)** From slow to fast				
	196 - 203	Macro 2 : All RGBW colours sequence					
	204 - 210	Macro 3 : Crossfade 1					
	211 - 218	Macro 4 : Crossfade 2					
	219 - 225	Macro 5 : Crossfade 3					
	226 - 233	Macro 6 : Crossfade 4					
	234 - 240	Macro 6 : Crossfade 5					
	241 - 248	Music-sensitive colour macro 1 : RGB	Mic sensitivity **(000 - 255)**				
	249 - 255	Music-sensitive colour macro 2 : RGBW					

6.11 - 5-channel mode = RGBW = 3CH5

	Valeur DMX	Effet
CHANNEL1	**000 - 255**	Red from 0 - 100%
CHANNEL 2	**000 - 255**	Green from 0 - 100%
CHANNEL 3	**000 - 255**	Blue from 0 - 100%
CHANNEL 4	**000 - 255**	White from 0 - 100%
	000 - 189	Main dimmer: 0-100%
	190 - 250	Slow to fast strobe
CHANNEL 5	**251 - 255**	Full power

6.12 - 6-channel mode = RGBW = 3CH6

	Valeur DMX	Effet
CHANNEL1	**000 - 255**	Red from 0 - 100%
CHANNEL 2	**000 - 255**	Green from 0 - 100%
CHANNEL 3	**000 - 255**	Blue from 0 - 100%
CHANNEL 4	**000 - 255**	White from 0 - 100%
CHANNEL 5	**000 - 255**	Dimmer: 0-100%
CHANNEL 6	**000**	No strobe
	001 - 255	Slow to fast strobe

6.13 - 7-channel mode = RGBW = 3CH7

CH 7	CH 6		CH 5	CH 4	CH 3	CH 2	CH 1
DMX values	**Function**						
000 - 007	Off	No function **(000 - 015)** **Strobe (016 - 255)** From slow to fast	Main dimmer **(000 - 255)** From 0-100%	White **(000 - 255)** From 0-100%	Blue **(000 - 255)** From 0-100%	Green **(000 - 255)** From 0-100%	Red **(000 - 255)** From 0-100%
008 - 015	Red			No function	No function	No function	No function
016 - 023	Orange						
024 - 030	Yellow						
031 - 038	Green						
039 - 045	Cyan						
046 - 053	Blue						
054 - 060	Pink						
061 - 068	Magenta						
069 - 075	Cool White (6000°K)						
076 - 083	Warm white (3200°K)						
084 - 090	Full power						
091 - 098	Light Pink						
099 - 105	Light Apricot						
106 - 113	Light Ocre						
114 - 120	Yellow-Green						
121 - 128	Green Pearl						
129 - 135	Grey Pearl						
136 - 143	Pearl						
144 - 150	Blue Pearl						
151 - 158	Green Veronese						
159 - 165	Blue Lagon						
166 - 173	Sky Blue						
174 - 180	Light Blue						
181 - 188	Cerulean Blue						
189 - 195	Macro 1 : All RGB colours sequence	**Speed(000 - 255)** From slow to fast					
196 - 203	Macro 2 : All RGBW colours sequence						
204 - 210	Macro 3 : Crossfade 1						
211 - 218	Macro 4 : Crossfade 2						
219 - 225	Macro 5 : Crossfade 3						
226 - 233	Macro 6 : Crossfade 4						
234 - 240	Macro 6 : Crossfade 5						
241 - 248	Music-sensitive colour macro 1 : RGB	Mic sensitivity **(000 - 255)**					
249 - 255	Music-sensitive colour macro 2 : RGBW						

7 - Infrared remote control

The infrared remote control supplied with the projectors allows you to remotely access all the functions of the projectors. The infrared sensor is located on the front of the projector.

Note : The remote control can also be used when the projector is in DMX mode.

1 - Black out button: Turns the projectors ON or OFF.

2 - SELECT PROG button : Launches built-in programs or allows you to choose colours. 4 different modes are available, each pressure allows you to switch from one mode to another.
Note : Colours and programs available with the SELECT PROG button depends on the DMX mode currently used:
Pure RGB or RGBW. Colours and programs are different for each DMX mode. Please refer to pages 6 to 14 for more details about DMX modes.
You will need to select a DMX mode before using the SELECT PROG button.

1st pressure	**Red LEDs flashing**: Fixed colours, step and crossfade programs selection with the 1 to 9 buttons, and with the + and - buttons. Use the FLASH button and the **+** and **-** buttons to configure the strobe speed. Use the FLASH button and the **+** and **-** buttons to configure the programs speed.
2nd pressure	**Blue LEDs flashing**: Automatic mode. Use the FLASH button and the **+** and **-** buttons to configure the strobe speed. Use the FLASH button and the **+** and **-** buttons to configure the programs speed.

3 - FLASH button: Activates or deactivates the Flash mode. Increase or decrease the flash speed with the + and - buttons of the remote control. This button can be used with each mode described above.

4 - SPEED button: Allows you to configure the the Step and Crossfade programs speed. Increase or decrease the speed with the + and - buttons of the remote control.

6 - DMX mode selection - DMX MODE buton
There are 13 different DMX modes.
You will need to select a DMX mode before controlling your projector in DMX mode ;
Press the DMX MODE and use the + and - buttons to switch from one mode to another :

LEDs ON	Mode
Red	1CH2
Green	1CH3
Blue	1CH4
White	1CH5
Red and Green	1CH6
Red and Blue	2CH2
Red and white	2CH4

LED ON	Mode
Green and blue	2CH5
Green and White	2CH6
Blue and White	2CH7
Red, Green and Blue	3CH5
Red, Green and White	3CH6
Red, Blue and White	3CH7

7 - SL/SA button : Activates the music-sensitive (SA) or slave (SL) modes. When using the music-sensitive mode (green LEDs), use the **+** and **-** to configure the microphone sensitivity. The slave mode is indicated by red LEDs.

8 - SET ADDR buttons and 0, 1, 2, 3, 4, 5, 6, 7, 8 and 9: Allows you to configure your projectors DMX address.

For instance, if you want to configure the address 245 :
- Press S, all the LEDs are flashing to indicate the beginning of the process.
- Press 2, the green LEDs of your projectors lit up to indicate the hundreds digit has been saved.
- Press 4, the blue LEDs of your projector lit up to indicate the tenths digit has been saved.
- Then press 5. All the LEDs will flash to confirm you the address has been saved properly.

Note : If you want to use the address 5, you will need to enter 005.

9 - R, G, B and W buttons: Adjusts colours brightness, **R** for red, **G** for green, **B** for blue, and **W** for white. Increase or decrease their brightness with the + and - buttons.
The **A** (amber) button is not available for these projectors.

Because CONTEST® takes the utmost care in its products to make sure you only get the best possible quality, our products are subjects to modifications without prior notice. That is why technical specifications and the products physical configuration might differ from the illustrations.
Make sure you get the latest news and updates about the CONTEST® products on www.contest-lighting.com
CONTEST® is a trademark of HITMUSIC S.A. - Zone Cahors sud - 46230 FONTANES - FRANCE